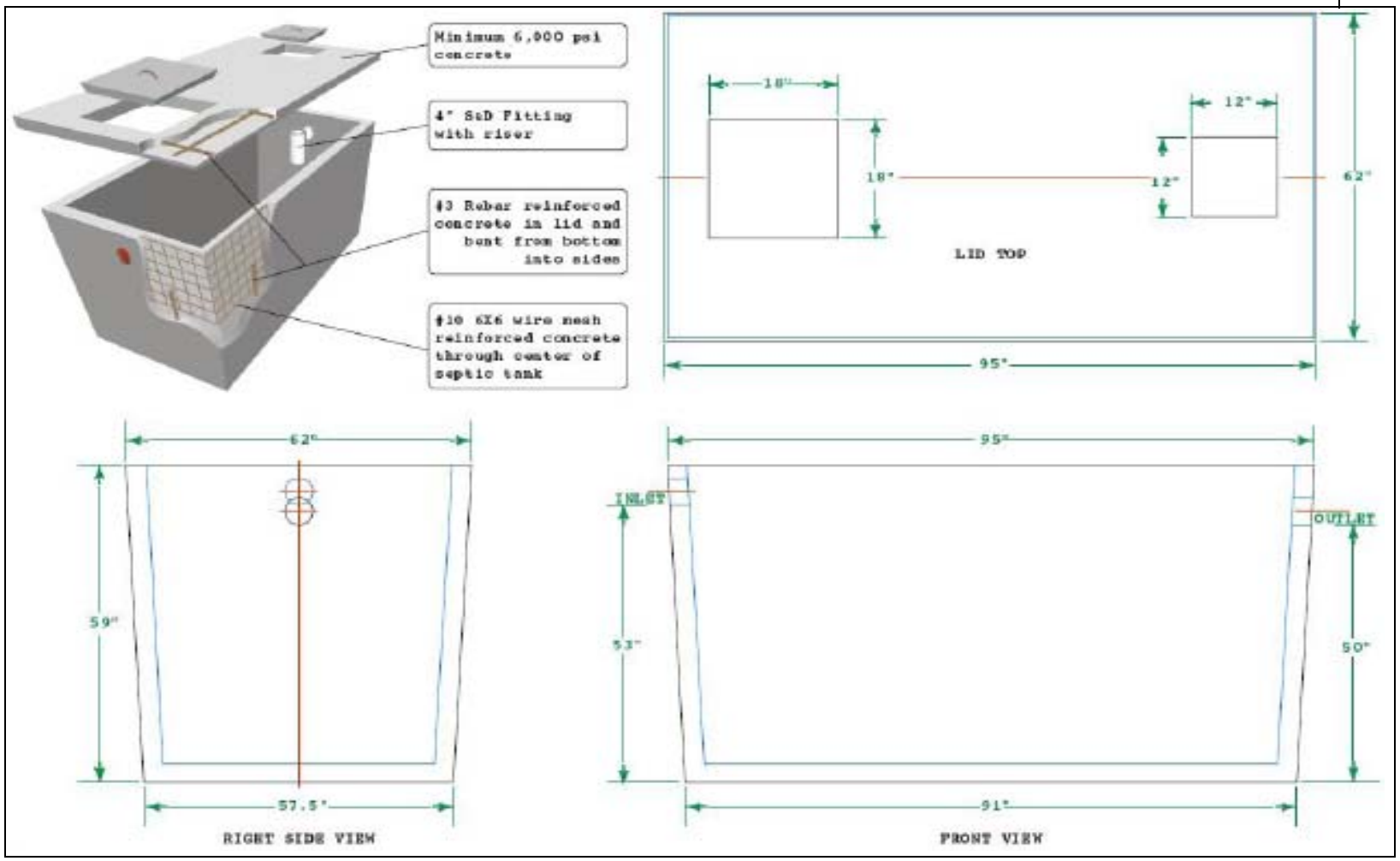

RJW Precast

www.rjwprecast.com
PO BOX 777
Hillsboro, Texas 76645

254-582-8777 Office
254-582-7585 Fax

1000 Gallion Septic Tank